SYSTEM 700 "GEMINI"

GYRO TECH inc

INSTALLATION AND SERVICE MANUAL FOR

SWING DOOR CONVERSION UNIT

Automatic Door Operator

5/91

P/N 128745 △1 ECN 2426

REQUIREMENTS

- POWER INPUT TO THE DOOR CONTROL MUST BE 120 VOLTS (50-60 HZ)
- MAXIMUM WIRE SIZE IS 14 AWG.
- ALL WIRING MUST CONFORM TO STANDARD WIRING PRACTICE IN ACCORDANCE WITH NATIONAL AND LOCAL WIRING CODES.
- NOTE: UNLESS OTHERWISE NOTED, ALL DIMENSIONS ARE GIVEN IN INCHES, (MILLIMETERS)
- MINIMUM FRAME FACE 1 3/4" (44.45MM)
- DOOR MUST SWING FREELY THROUGH THE ENTIRE OPENING AND CLOSING CYCLE BEFORE BEGINNING THE INSTALLATION.
- MINIMUM CEILING CLEARANCE (FROM TOP OF DOOR) 7" (178MM).
- FOR WIRING REFER TO WIRING INSTRUCTION ON PAGE 5.
- HAND OF UNIT AND HAND OF DOOR MUST BE THE SAME. HAND OF UNIT IS NOT REVERSIBLE.
- DOOR MUST BE HUNG ON BUTT HINGES OR 3/4" (19MM) OFFSET PIVOTS.
- DOOR THICKNESS MUST BE 1 3/4" (44MM) MINIMUM 2 1/4" (57MM) MAXIMUM.
- USE OF A SUPPLEMENTAL DOOR STOP IS ALWAYS REQUIRED.
- WHEN APPLYING THE HANDICAP STICKERS, IF "PUSH-N-GO" IS NOT TO BE USED, CUT OFF THE "PUSH DOOR TO OPERATE" PORTION OF THE AUTOMATIC DOOR STICKER.

DETERMINE HAND OF DOOR

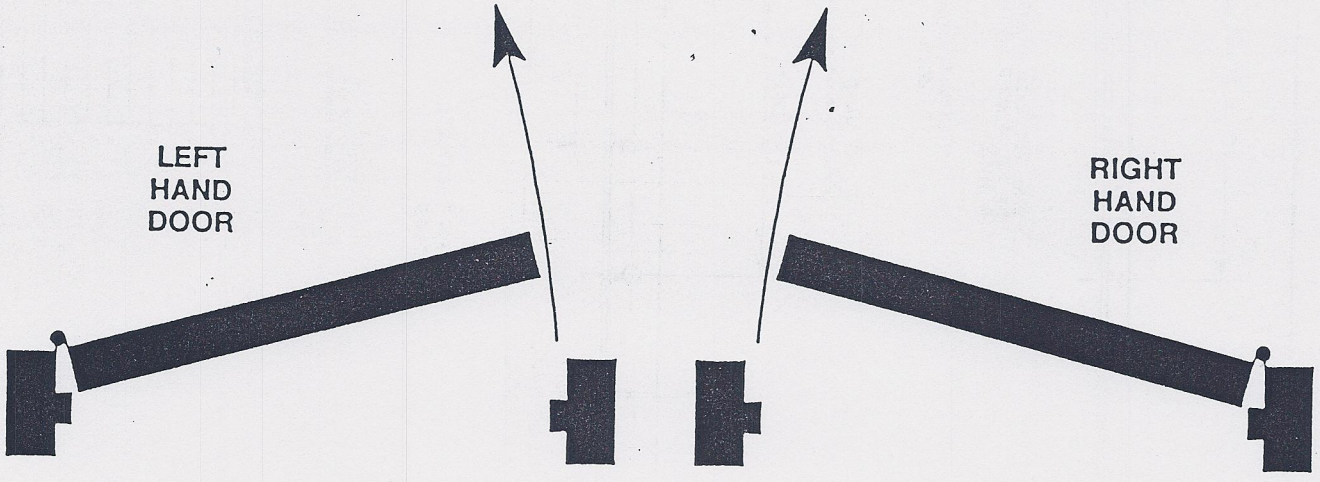

GENERAL

- BEFORE BEGINNING THE INSTALLATION, VERIFY THAT THE DOOR FRAME IS PROPERLY REINFORCED AND IS WELL ANCHORED IN THE WALL. UNREINFORCED HOLLOW METAL FRAMES SHOULD BE PREPARED AND FITTED WITH $\frac{1}{4}$-20 BLIND RIV-NUTS FURNISHED BY THE INSTALLER.
- ELECTRICAL CONDUIT AND SWITCH OR SENSOR WIRES SHOULD BE PULLED TO THE FRAME BEFORE PROCEEDING.

FASTENERS FOR FRAME

- $\frac{1}{4}$-20 MACHINE SCREWS FOR HOLLOW METAL AND ALUMINUM OR NO. 14 - 2 3/4" (70MM) WOOD SCREWS.

FASTENERS FOR DOOR

- $\frac{1}{4}$-20 MACHINE SCREWS AND 3/8 DIAMETER X 1 3/4 (45MM) SEX-NUT.

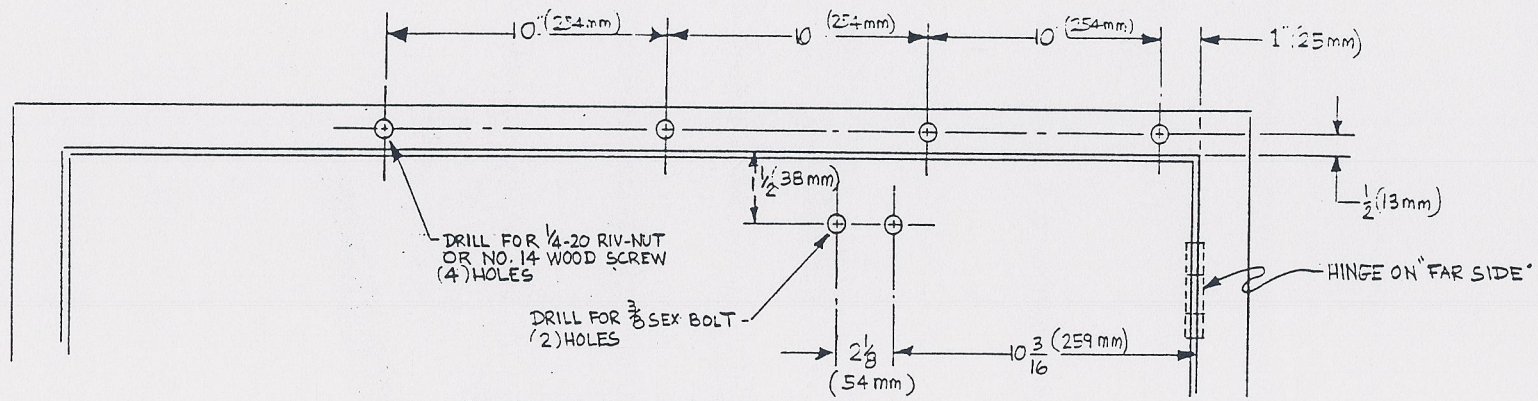

RIGHT HAND OUT SWING DOOR

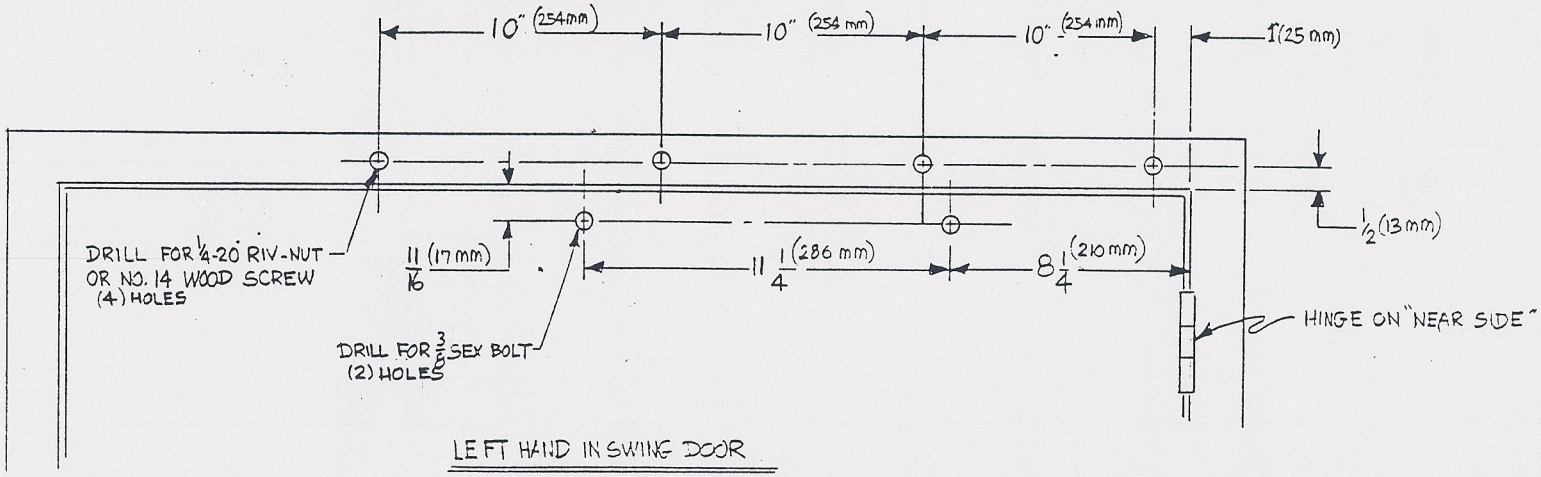

LEFT HAND IN SWING DOOR

REVISIONS	DATE		
		DATE: 3-21-91	PART NAME: FRAME DRILLING DETAILS
		SCALE: ~	MATERIAL:
		DRAWN BY: JES	SPECIFICATIONS: LOW ENERGY OPERATOR
		APPROVED BY:	
		TOLERANCES (UNLESS NOTED) FRACTIONAL ± 1/64; XX ± .010; XXX ± .005; ANGLES ± 1/2°	GYRO TECH inc.
			DRAWING NO. 2
			PART NO.

DESIGN PRODUCTS CO —

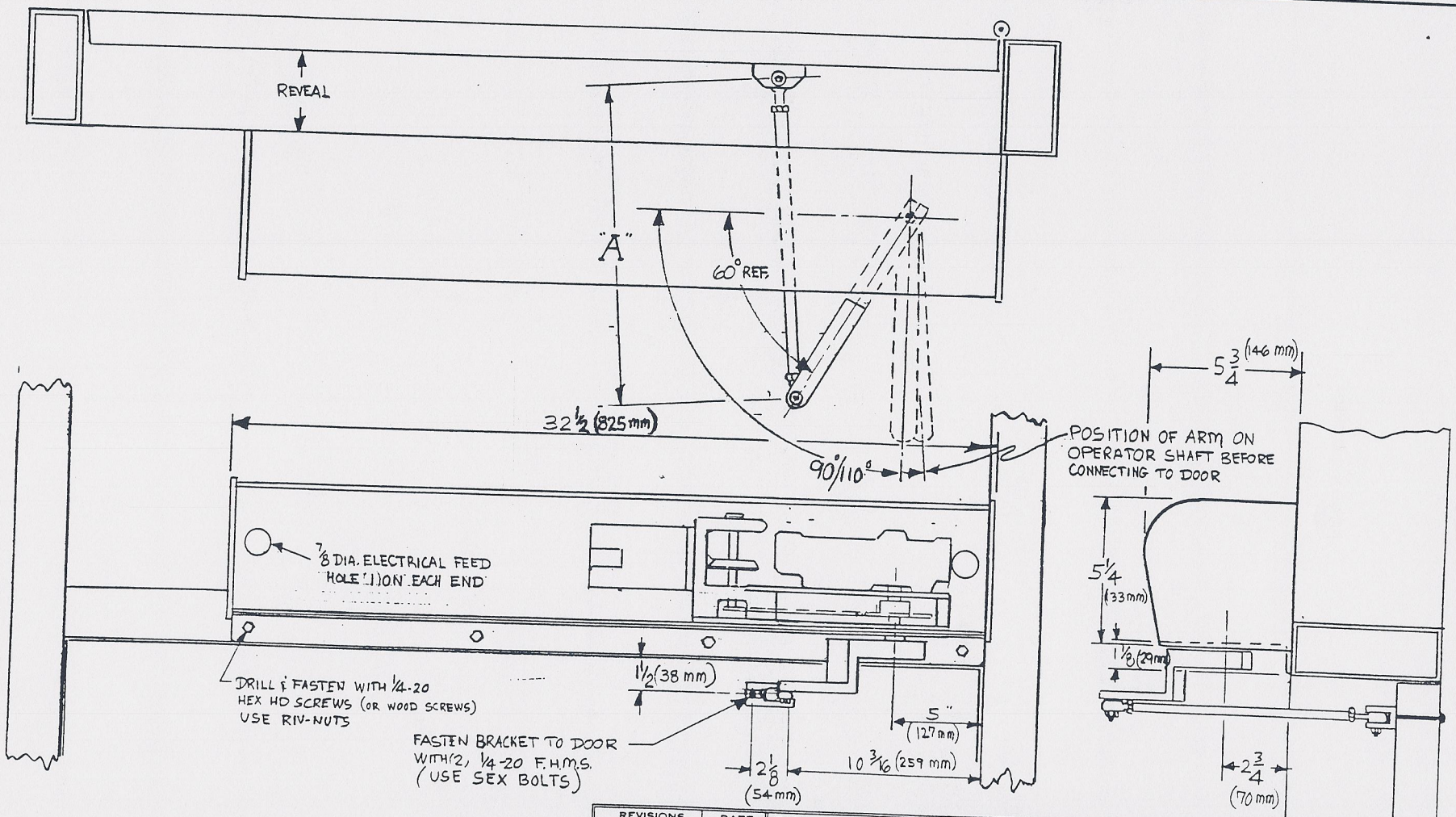

REVEAL	"A"
1⅛ (29 mm)	11⅞ (302 mm)
2⅛ (54 mm)	12⅞ (327 mm)
3⅛ (79 mm)	13⅞ (352 mm)
4⅛ (105 mm)	14⅞ (378 mm)

REVISIONS	DATE

DATE: 1-10-90
SCALE: ~~
DRAWN BY: JES
APPROVED BY:

TOLERANCES (UNLESS NOTED)
FRACTIONAL . . ± 1/64
.XX . . . . . ± .010
.XXX . . . . . ± .005
ANGLES . . . . ± ½°

PART NAME: INSTALLATION DETAILS / OUT SWING RH
MATERIAL:
SPECIFICATIONS: LOW ENERGY OPERATOR

GYRO TECH inc.

DRAWING NO. 3
PART NO.

DESIGN PRODUCTS CO —

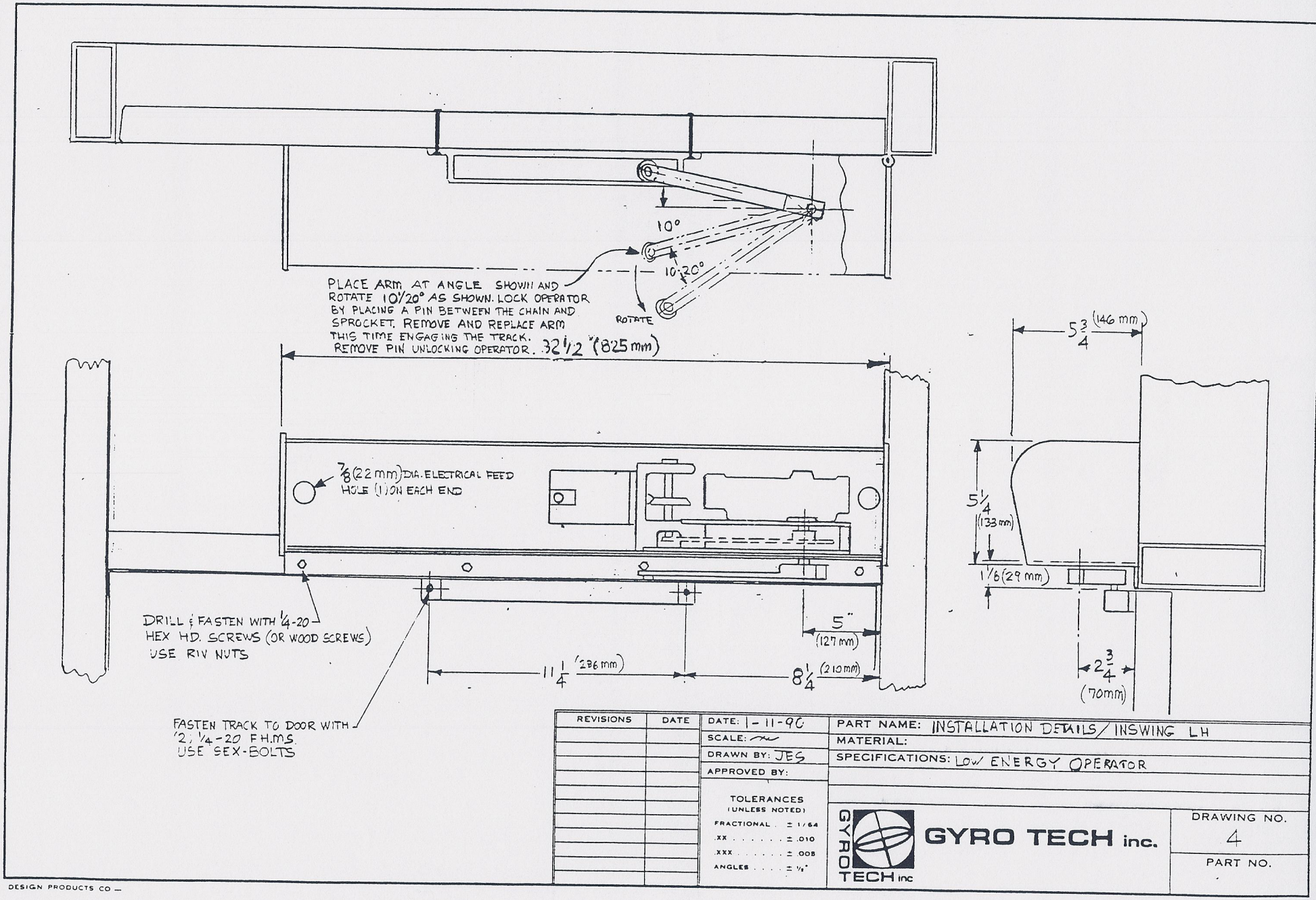

REVISIONS	DATE		
		DATE: 1-11-90	PART NAME: INSTALLATION DETAILS / INSWING LH
		SCALE: ~	MATERIAL:
		DRAWN BY: JES	SPECIFICATIONS: LOW ENERGY OPERATOR
		APPROVED BY:	

TOLERANCES (UNLESS NOTED)
FRACTIONAL . . . ± 1/64
.XX . . . . . ± .010
.XXX . . . . . ± .005
ANGLES . . . . ± 1/2°

GYRO TECH inc.

DRAWING NO. 4

PART NO.

DESIGN PRODUCTS CO —

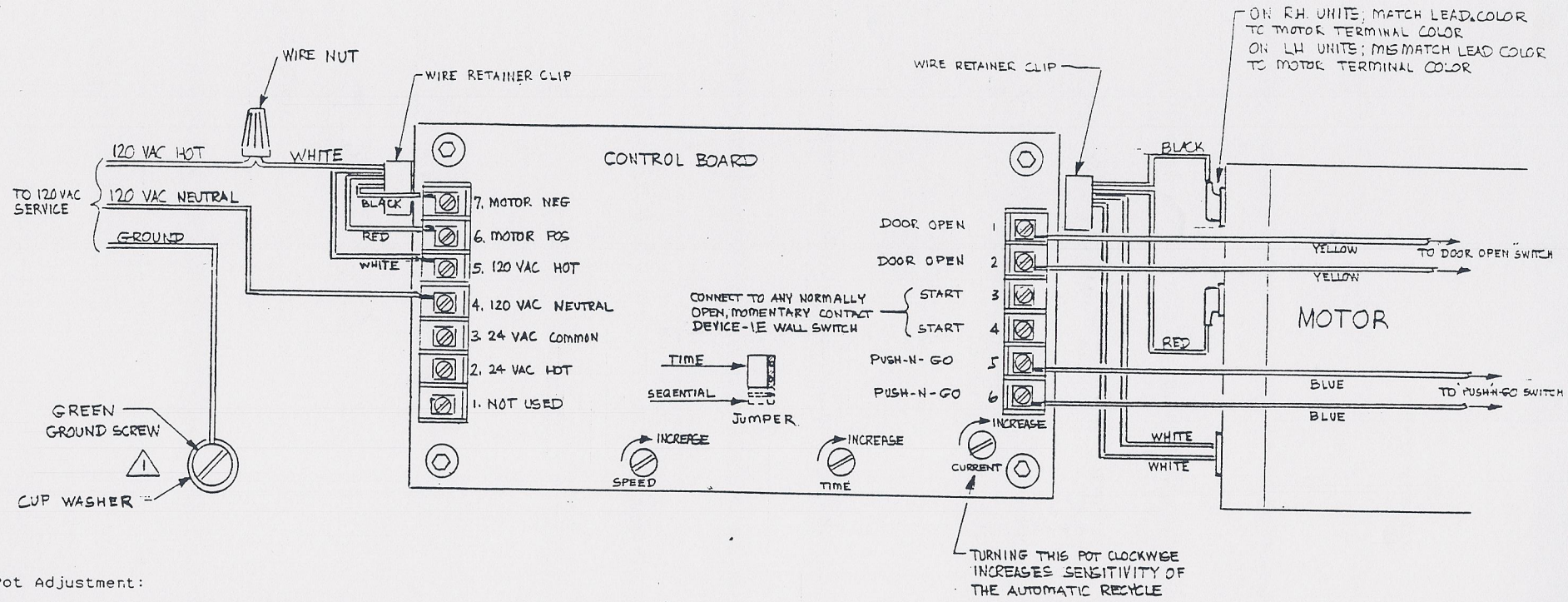

Pot Adjustment:

1. Move Jumper to the "Seal" position.
2. Adjust "Speed Pot" full CCW.
3. Adjust "Current Pot" full CCW.
5. Adjust "Time Pot" full CCW.
5. Attach all Input and Output wiring per diagram above.
6. Apply 120V AC power.
7. Close either "Start" or "Push 'N Go" switch to activate door.
8. Close either "Start" or "Push 'N Go" switch to disable door.
9. Adjust "Speed Pot" for optimum speed. Repeat steps 6 and 7.
10. Block door with heavy object.
11. Activate door. Motor should remain on.
12. Adjust "Current Pot" SLOWLY until motor turns off.
13. Remove object. Activate door. Door should open and travel to end. Motor should remain on at end of travel.
14. Disable door. Block door again. Activate door. Door should travel until object is hit and then unit will shut down.
15. Remove object. Move Jumper to the "Time" position.
16. Activate door. Door should remain open for 5 to 7 seconds and then turn off.
17. Adjust "Time Pot" for optimum time. Repeat step 16.
18. Place Jumper in position required.
19. End of adjustment.

CAUTION! PLEASE USE CARE TO AVOID BENDING THE PINS WHEN REMOVING AND REPLACING THE "TIME-SEQENTIAL" JUMPER.

NOTES: IF SEQENTIAL OPERATION IS DESIRED PLACE JUMPER IN "SEQENTIAL" POSITION AND DISCONNECT PUSH-N-GO LEADS

IF "PUSH-N-GO" IS NOT DESIRED, DISCONNECT THE BLUE PUSH-N-GO LEADS

REVISIONS	DATE
1 ECN 2426	2-6-92

DATE: 5-22-91
SCALE: NONE
DRAWN BY: JFS
APPROVED BY:

TOLERANCES (UNLESS NOTED)
FRACTIONAL . . ± 1/64
.XX . . . . . ± .010
.XXX . . . . . ± .005
ANGLES . . . . ± 1/2°

PART NAME: ELECTRICAL CONNECTIONS TO CONTROL
MATERIAL:
SPECIFICATIONS: LOW ENERGY OPERATOR

GYRO TECH inc.

DRAWING NO. 5
PART NO.

DESIGN PRODUCTS CO —

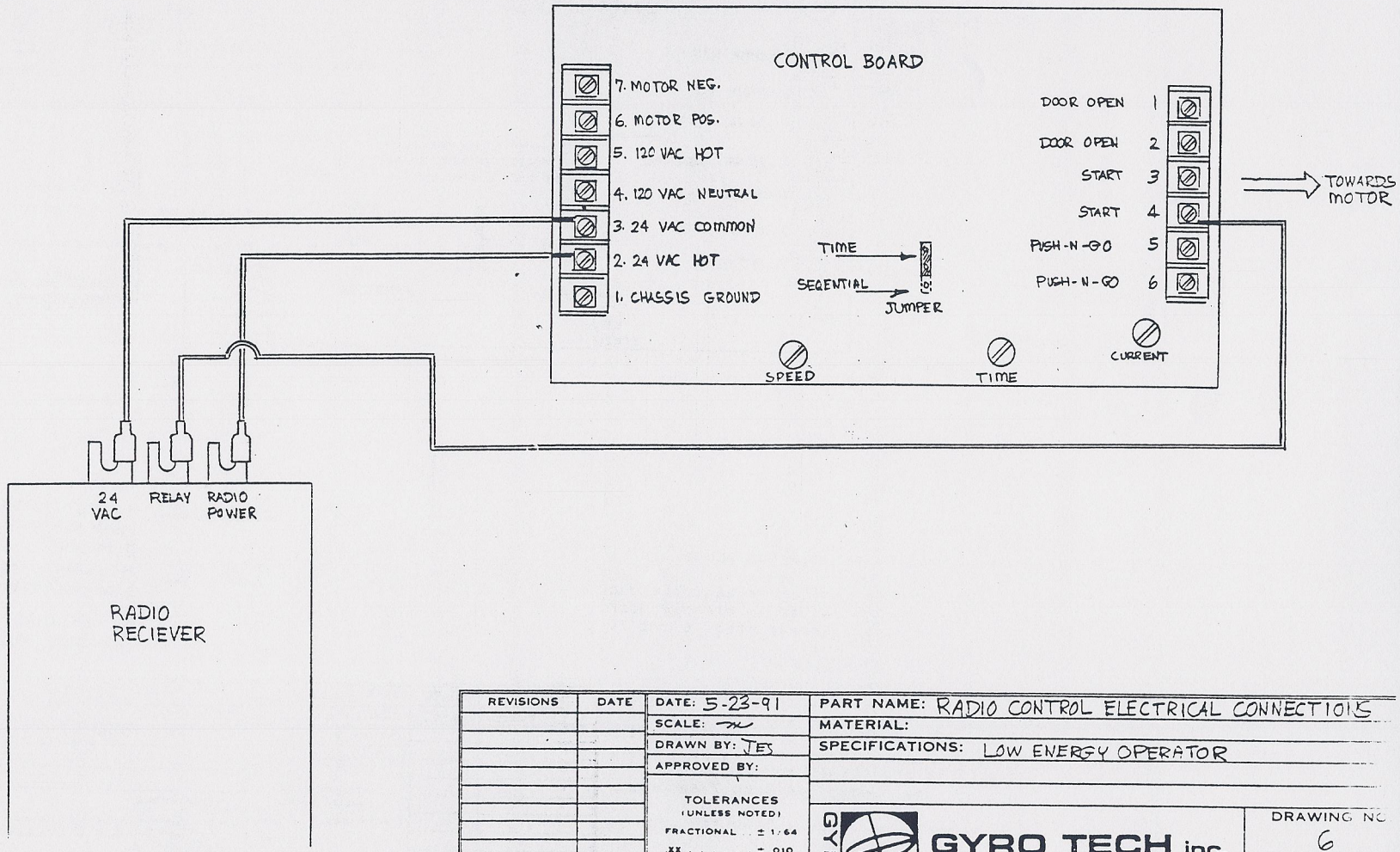

REVISIONS	DATE

DATE: 5-23-91
SCALE: —
DRAWN BY: JES
APPROVED BY:

TOLERANCES (UNLESS NOTED)
FRACTIONAL . . . ± 1/64
.XX . . . . . ± .010
.XXX . . . . . ± .005
ANGLES . . . . ± 1/2°

PART NAME: RADIO CONTROL ELECTRICAL CONNECTIONS
MATERIAL:
SPECIFICATIONS: LOW ENERGY OPERATOR

GYRO TECH inc.

DRAWING NO 6

PART NO

DESIGN PRODUCTS CO —

IMPORTANT

REGULATION Do not allow door to slam into frame. A "normal" closing time from 90° open position is 5 to 7 seconds, evenly divided between main swing speed and latch swing speed. Use socket screw key furnished to adjust speed. To slow **MAIN SWING SPEED** of door turn **MAIN SPEED** screw clockwise. To slow **LATCH SPEED** of door turn **LATCH SPEED** screw clockwise. To increase **BACK-CHECK** turn **BACK-CHECK** screw clockwise. Use lightest **BACK-CHECK** that will retard door opening sufficiently. Do not use an **ABRUPT BACK-CHECK**, nor expect door closer to act as a door stop.

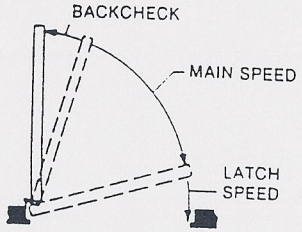

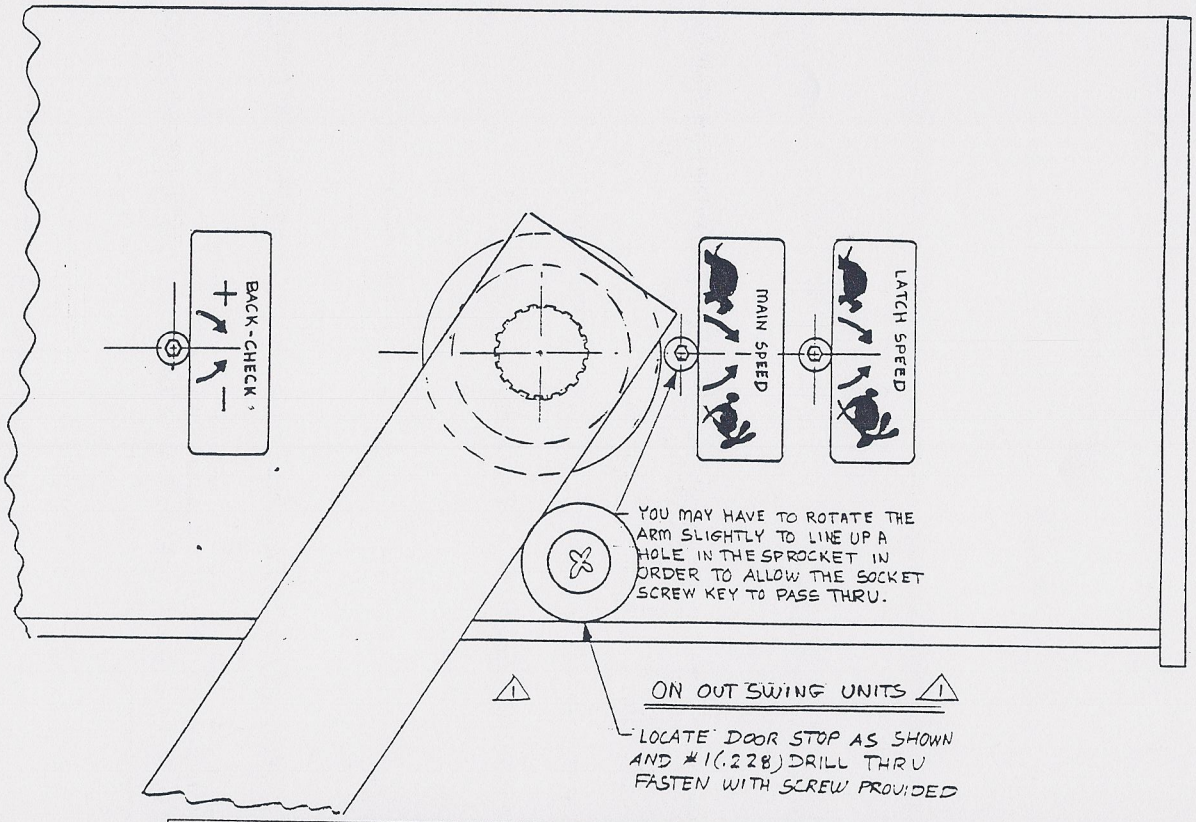

CAUTION

IMPROPERLY INSTALLED OR REGULATED CLOSERS CAN CAUSE PROPERTY DAMAGE OR PERSONAL INJURY. PLEASE FOLLOW THESE INSTRUCTIONS CAREFULLY.

REVISIONS	DATE
1 ECN 2426	2-6-92

DATE: 1-16-90
SCALE:
DRAWN BY: JES
APPROVED BY:

TOLERANCES (UNLESS NOTED)
FRACTIONAL ± 1/64
.XX ± .010
.XXX ± .005
ANGLES ± ½°

PART NAME: DOOR SPEED REGULATION PROCEDURE
MATERIAL:
SPECIFICATIONS: LOW ENERGY OPERATOR

GYRO TECH inc.

DRAWING NO. 7
PART NO.

DESIGN PRODUCTS CO —

EXCERPT FROM ANSI/BHMA A156.19

4. REQUIREMENTS FOR LOW ENERGY POWER OPERATED DOORS - (SWINGING) OR LOW ENERGY POWER OPEN DOORS - (SWINGING)

4.1 Opening Speed

4.1.1 Doors shall be field adjusted so that opening speed to back check or 80 degrees shall be 3 seconds or longer as required in Table I.

4.1.2 Opening speed to fully open shall be 4 seconds or longer.

4.2 Closing Speed

4.2.1 Doors shall be field adjusted to close from 90 degrees to 10 degrees in 3 seconds or longer as required in Table I.

4.2.2 Doors shall be field adjusted to close from 10 degrees to fully closed in not less than 1.5 seconds.

4.3 Unless a sensing device is used to hold the door open, the door shall be field adjusted to remain fully open for not less than 5 seconds.

4.4 The force required to prevent a door from opening or closing shall not exceed a 15 lbf (67 N) applied 1 in (25 mm) from the latch edge of the door at any point in the opening or closing cycle.

4.5 The kinetic energy of a door in motion shall not exceed 1.25 lbf-ft (1.69 Nm). Table I provides speed settings for various weights of doors for obtaining results complying with this paragraph.

4.6 In the event of failure, doors shall open with a manual pressure not to exceed a 25 lbf (111 N) at point 1 in (25 mm) from the latch edge of the door.

4.7 Doors shall be equipped with a sign(s) visible from either side, instructing the user as to the operation and function of the door.

TABLE I

"D" Door Leaf Width Inches (mm)	Minimum Opening Time to Back Check or 80 degrees (in Seconds) or Minimum Closing Time from 90 degrees to Latch Check or 10 degrees (in seconds)				
	"W" Door Weight in Pounds (kg)				
	100(45.4)	125(56.7)	150(68.0)	175(79.4)	200(90.7)
30 (762)	3.0	3.0	3.0	3.0	3.5
36 (914)	3.0	3.5	3.5	4.0	4.0
42 (1067)	3.5	4.0	4.0	4.5	4.5
48 (1219)	4.0	4.5	4.5	5.0	5.5

Doors of other weights and widths can be calculated using the formula:

$$T = \frac{D\sqrt{W}}{133 \text{ lbf-ft}} \qquad \left(T = \frac{D\sqrt{W}}{2260 \text{ Nm}} \right)$$

Where: T = Time, seconds

D = Door width, inches (mm)

W = Door weight, lbs. (kg)

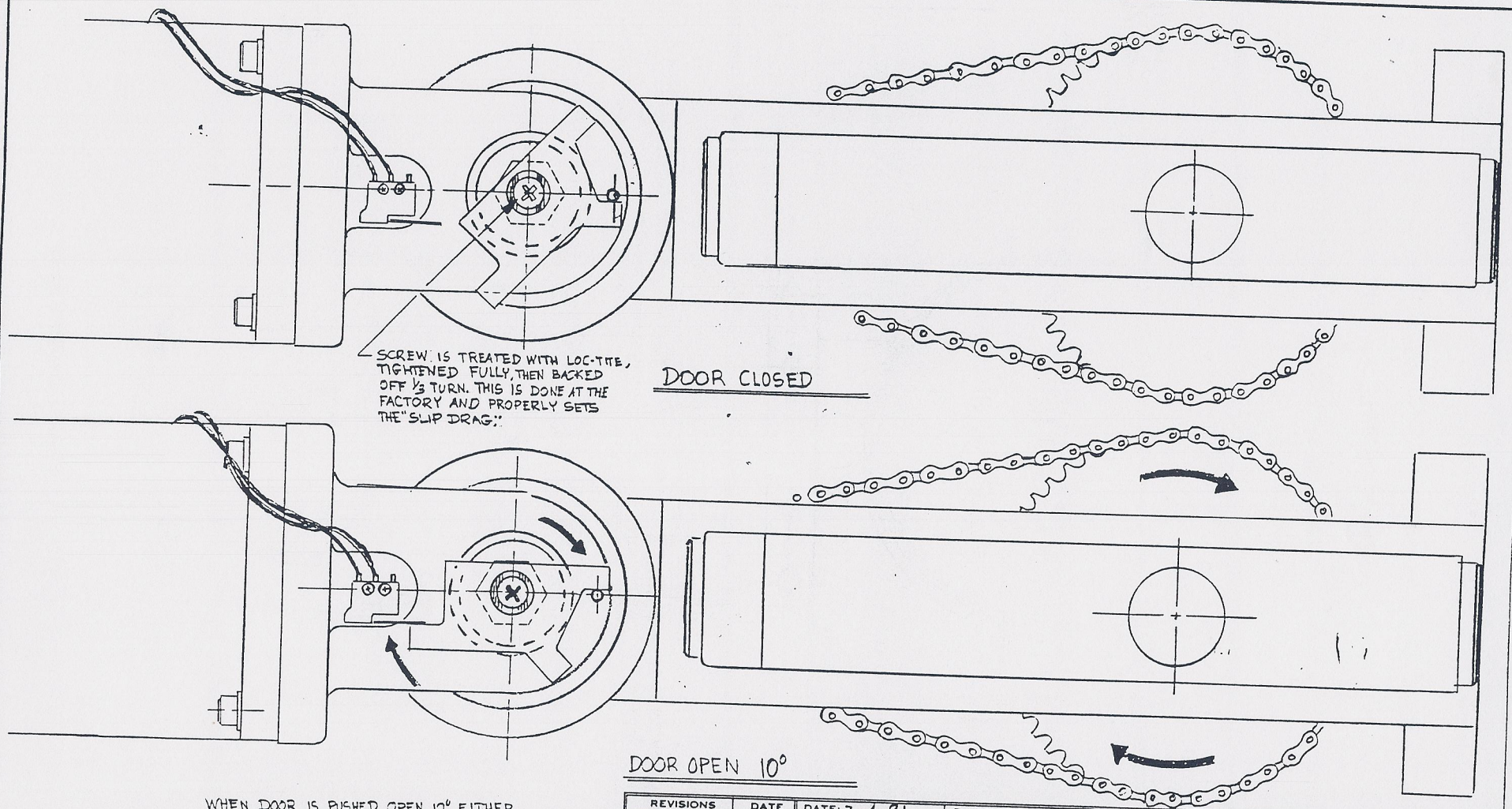

WHEN DOOR IS PUSHED OPEN 10° EITHER FROM "CLOSED" OR FROM ANY OTHER POSITION, THE ACTUATOR SHOULD ROTATE AS SHOWN TRIPPING THE MICRO SWITCH.

REVISIONS	DATE

DATE: 3-4-91
SCALE: NONE
DRAWN BY: JES
APPROVED BY:

TOLERANCES (UNLESS NOTED)
FRACTIONAL . . ± 1/64
.XX . . . . . ± .010
.XXX . . . . . ± .005
ANGLES . . . . ± 1/2°

PART NAME: "PUSH-N-GO" ACTUATION
MATERIAL:
SPECIFICATIONS: LOW ENERGY OPERATOR

GYRO TECH inc.

DRAWING NO. 9

PART NO.

DESIGN PRODUCTS CO —

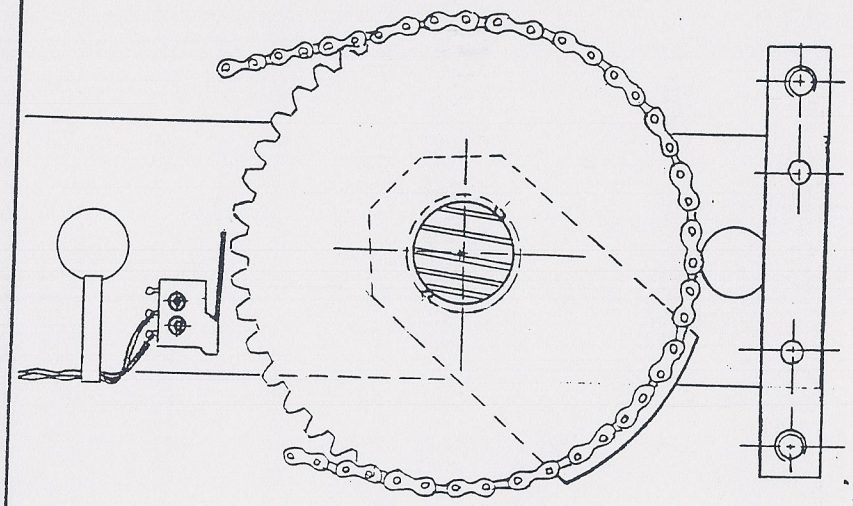

DOOR CLOSED

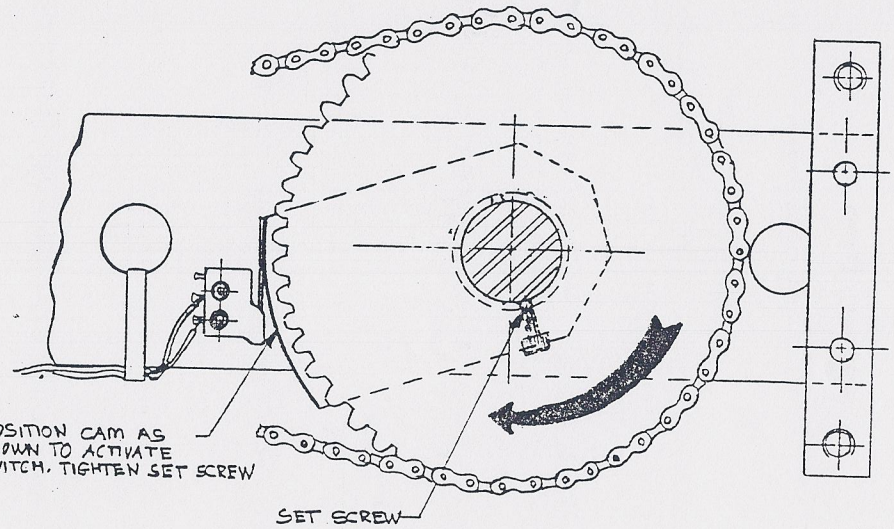

DOOR FULLY OPEN

THE CONTROL HAS A CIRCUIT THAT SENSES WHEN THE MOTOR HAS STALLED (I.E AN OBSTRUCTION) AND CUTS THE POWER WHEN THIS OCCURS ALLOWING THE DOOR TO RECLOSE. HOWEVER SINCE THE MOTOR ALSO STALLS WHEN THE DOOR IS FULLY OPEN, A SWITCH IS NECESSARY TO TELL THE CONTROL THAT THE DOOR IS OPEN AND TO IGNORE THE STALLED MOTOR.

REVISIONS	DATE

DATE: 3-18-91
SCALE: NONE
DRAWN BY: JES
APPROVED BY:

TOLERANCES (UNLESS NOTED)
FRACTIONAL . . . ± 1/64
.XX . . . . . ± .010
.XXX . . . . . ± .005
ANGLES . . . . ± 1/2°

PART NAME: SWITCH ADJUSTMENT/DOOR OPEN
MATERIAL:
SPECIFICATIONS: LOW ENERGY OPERATOR

GYRO TECH inc.

DRAWING NO. 10
PART NO.

DESIGN PRODUCTS CO —